Frequency To Voltage LED Bargarph Display Meter

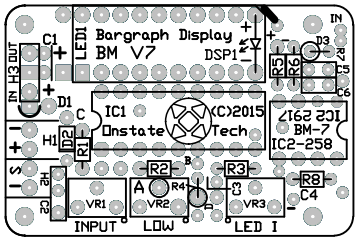

Parts Labels

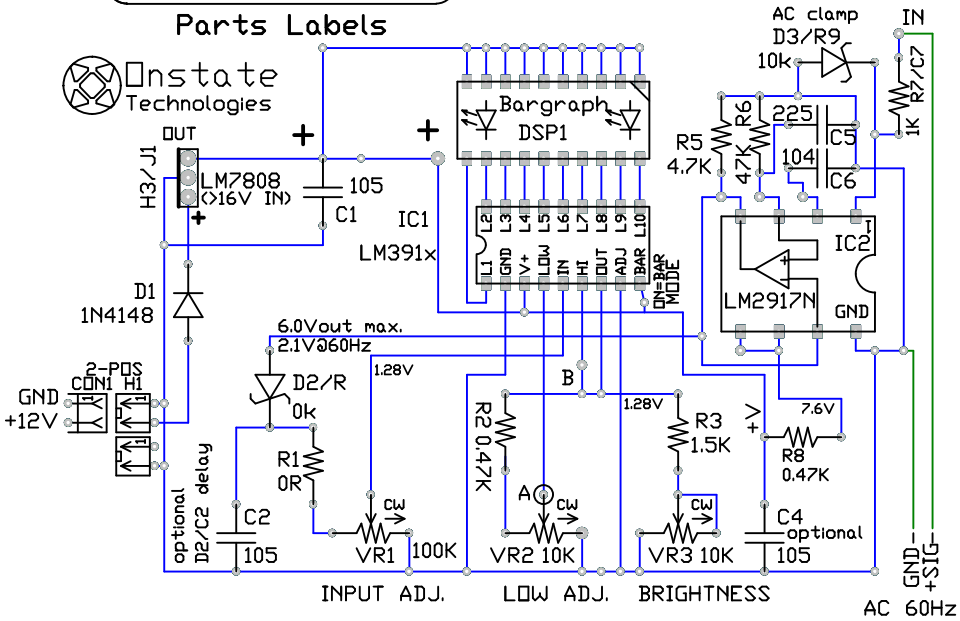

Bargraph Display Meter
Part: BM-V7 (C)2015

FREQ-VOLT DISPLAY METER

All *-ND are Digi-Key part codes (Digi-key.com)
All resistors: 1/8W, 5%
(value)EBK-ND, eg. 47KEBK-ND (47K)
Trimmer resistors (VR), Cermet, PC pins
3362P-<VALUE>LF-ND, top adj. 103=10k, 104=100k
3362S-1-<VALUE>LF, side adj. 203=20k
D1: 1N4148, general Si diode, 0.2A
J1/H3: Jumper, >16V in LM7808, 8V reg, 1A
H/CONN, 0.1" 2-pos connectors.
Caps C: mono cer. 104=0.1uF, 103=0.01uF, 105=1.0uF
C1: power filter, any type >1.0uF on +/-
IC1: LM3914N-1-ND, 10 seg. bargraph driver
IC2: F-V converter, DIP8 LM2917N-8/NOPB
Vout=fin*Vcc*R6*C6 Vcc=7.6V
DISP1: 160-1067-ND, 10 seg. LED bargraph, GRN
Optional: D2/C2 sets display response delay
D2/R1 wire jumper for fast display

Display Dot/Bar mode:
1. Cut trace on bottom side near MODE label to pin9