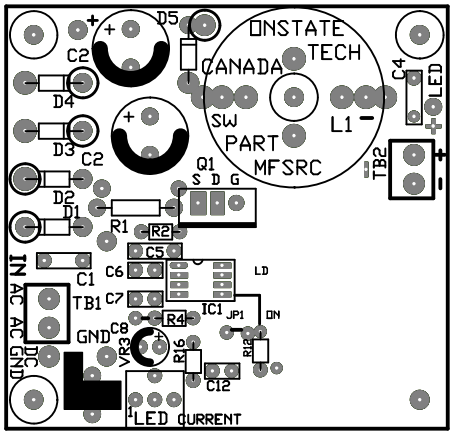

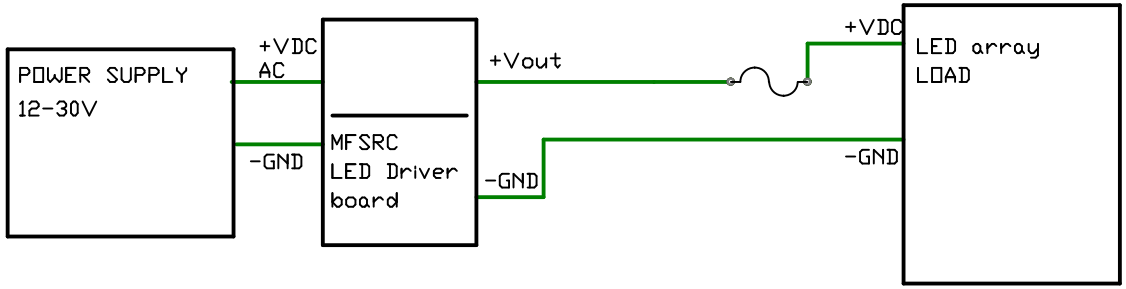

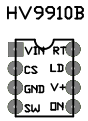

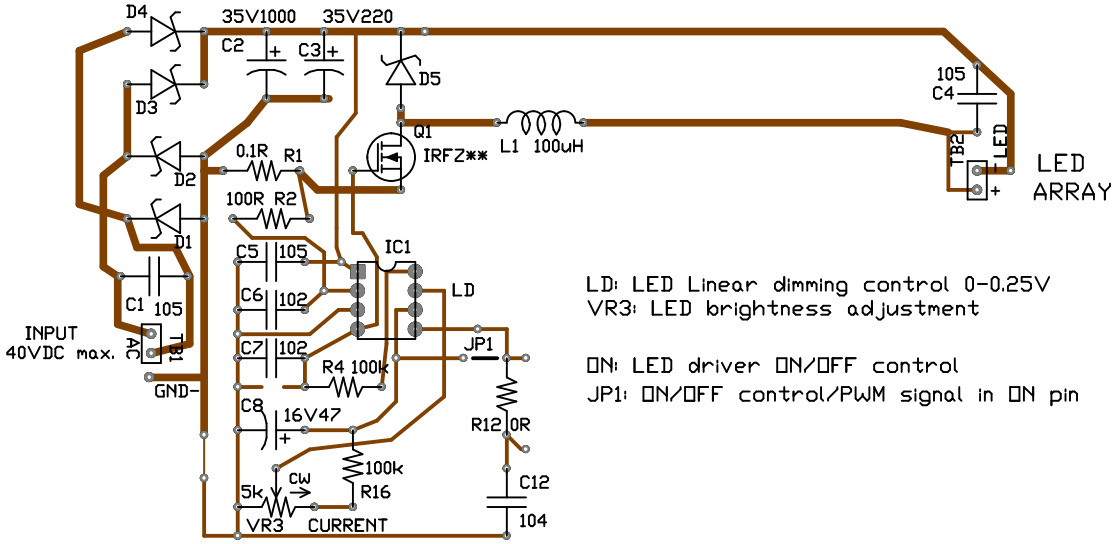

LD: LED Linear dimming control 0-0.25V
VR3: LED brightness adjustment

ON: LED driver ON/OFF control
JP1: ON/OFF control/PWM signal in ON pin

Part: PCB-MFSRC
DigiKey.com parts
R1: RSMF1JTR100CT-ND
R*, 1/8W, 5%
<value>EBK-ND
2.2KEBK-ND => 2.2K resistor
D*: schottky diodes, 3A/5A
D*:1N5822-TPMSCT-ND
C(10*): MLCC, value
C2/C3: P12411-ND/P12406-ND
VR3: 3362P-502LF-ND top adjust
TB1/2: 609-3918-ND
C8: P5528-ND
IC1: HV9910B
Q1: IRFZ44ZPBF-ND
L1: 811-1345-ND

Part: PCB-MFSRC
DigiKey.com parts
Match components with suitable current and voltage rating
Onstate Tech.
VR3= 0-0.35V LED brightness control.
Use GND- and AC in for DC power input
See HV9910B data sheet for more design information

Confidential | (C)2011 Onstate Technologies Inc.
All information are property of Onstate Technologies Inc.
No information shall be disclosed without permission from Onstate Technologies Inc.

Description: Basic LED driver switching regulator		Date: Feb. 15, 2011		
Part Code: PCB-MFSRC	Rev. 1	File Name: CIR-MFSRC-1 LD basic SCH	Drawn By: D. H.	Page: 1 of 1