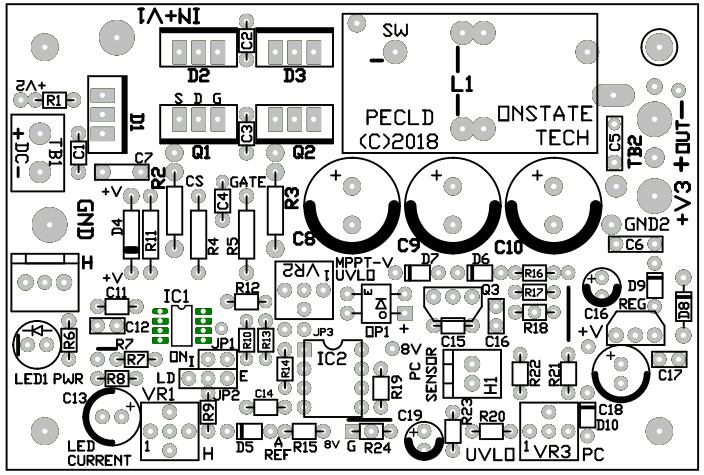

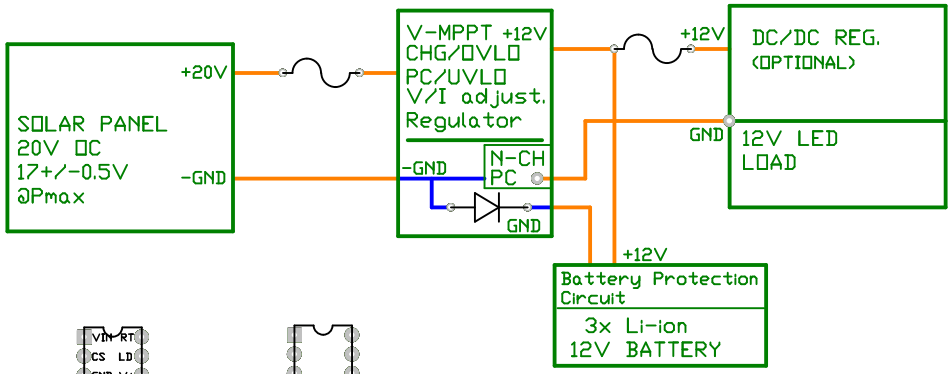

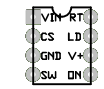

RT CTRL
R7=SW-RT
LD/CS=0.25V

RT-CTRL
R7=GND
CS=0.275V
LD=1.5V dim/off

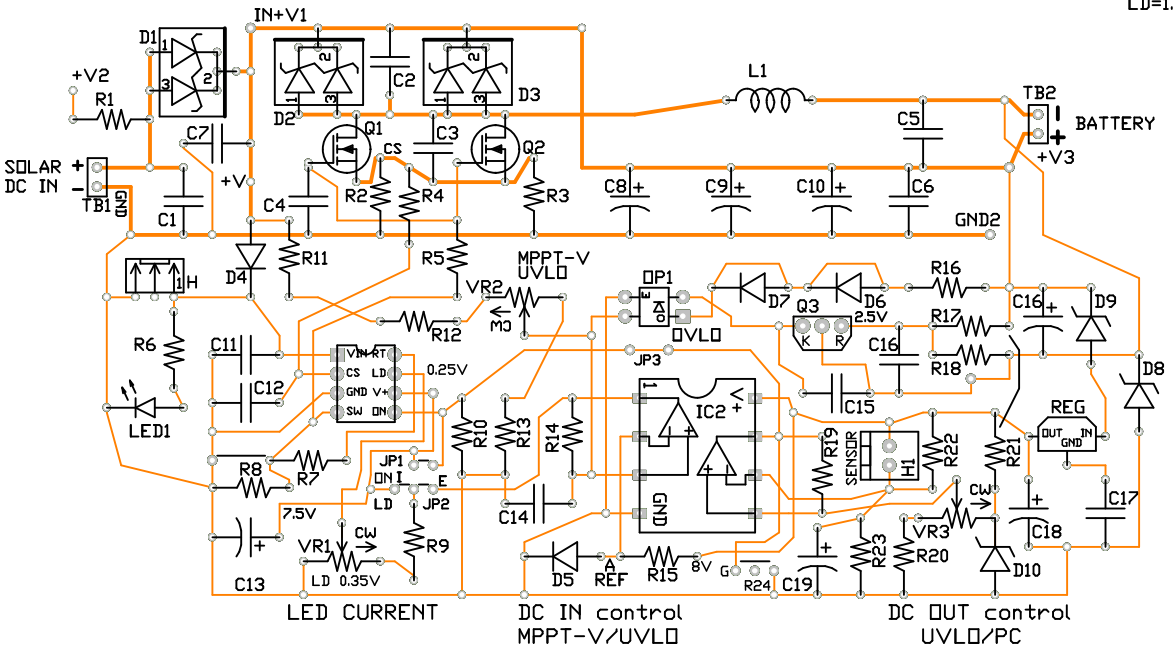

Mode Setup:

1. High-current LED driver.
2. LED driver with photocell auto day/night.
3. LED driver with photocell and under-voltage shut-off.
4. Solar controller battery charger.
5. Solar LED light with photocell/battery.
6. Solar LED light with photocell, battery, UVLO/OVLO.

See BOM for functional use of each part.

(C)2018 Onstate Technologies

All information are property of Onstate Technologies Inc.
No information shall be disclosed without permission from Onstate Technologies Inc.

Description: Solar charge controller, V-MPPT, OVLO, UVLO, PC, LOAD		Date: Aug/18	
Part Code: PCB-PECLD	Rev. 1	File Name: CIR-PECLD schematic	Drawn By: D. H.	Page: 1 of 1