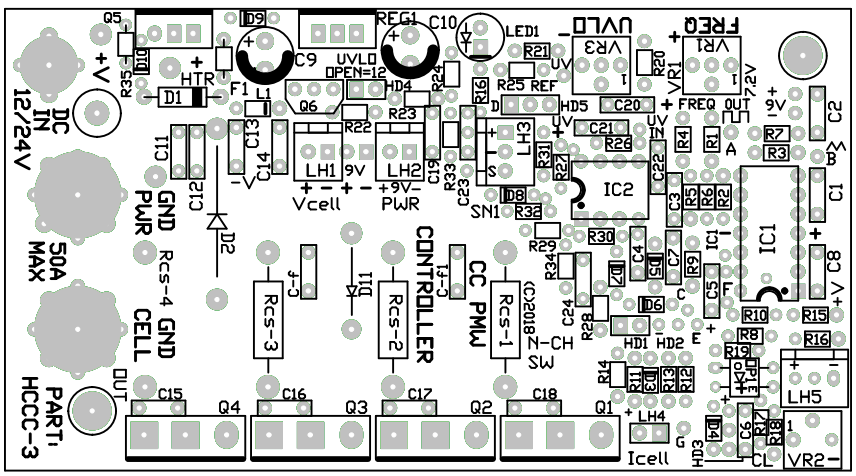

DC IN 12/24V
+V
GND PWR
50A MAX
GND CELL
PART: HCCC-3
OUT
Rcs-4
Rcs-3
Rcs-2
Rcs-1
CONTROLLER
CC PMW
(C)2018 N-CH SW
Vcell
PWR
LH1
LH2
LH3
LH4
LH5
IC1
IC2
VR1
VR2
VR3
FREQ
UVLO
REG1
LED1
HTR
F1
L1
Q1
Q2
Q3
Q4
Q5
Q6
D1
D2
D6
D8
D9
D10
D11
C9
C10
C11
C12
C13
C14
C15
C16
C17
C18
C19
C20
C21
C22
C23
C24
R25 REF
R26
R27
R28
R29
R30
R31
R32
R33
R34
R35
R1
R2
R3
R4
R5
R6
R7
R8
R9
R10
R11
R12
R13
R14
R15
R16
R17
R18
R19
R20
R21
R22
R23
R24
R25
R26
R27
R28
R29
R30
R31
R32
R33
R34
R35
C1
C2
C3
C4
C5
C6
C7
C8
C9
C10
C11
C12
C13
C14
C15
C16
C17
C18
C19
C20
C21
C22
C23
C24
HD1
HD2
HD3
HD4
HD5
SN1
Icell
CL