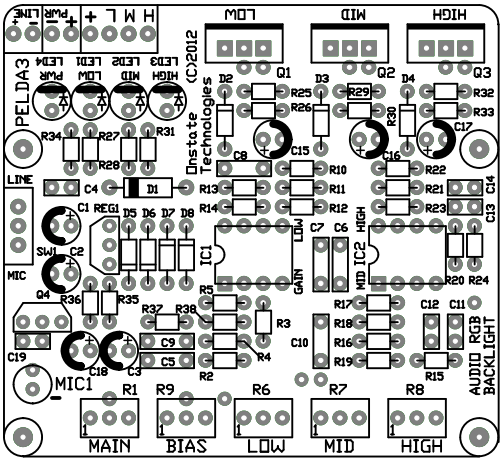
PELDA3
LINE
MIC
MIC1
MAIN
BIAS
LOW
MID
HIGH
AUDIO RGB BACKLIGHT
Unstate Technologies
(C)2012
IC1
IC2
GAIN
REG1
SW1
Q1
Q2
Q3
Q4
D1
D2
D3
D4
D5
D6
D7
D8
R1
R2
R3
R4
R5
R6
R7
R8
R9
R10
R11
R12
R13
R14
R15
R16
R17
R18
R19
R20
R21
R22
R23
R24
R25
R26
R27
R28
R29
R30
R31
R32
R33
R34
R35
R36
R37
R38
C1
C2
C3
C4
C5
C6
C7
C8
C9
C10
C11
C12
C13
C14
C15
C16
C17
C18
C19
LED1
LED2
LED3
LED4
PWR
LINE