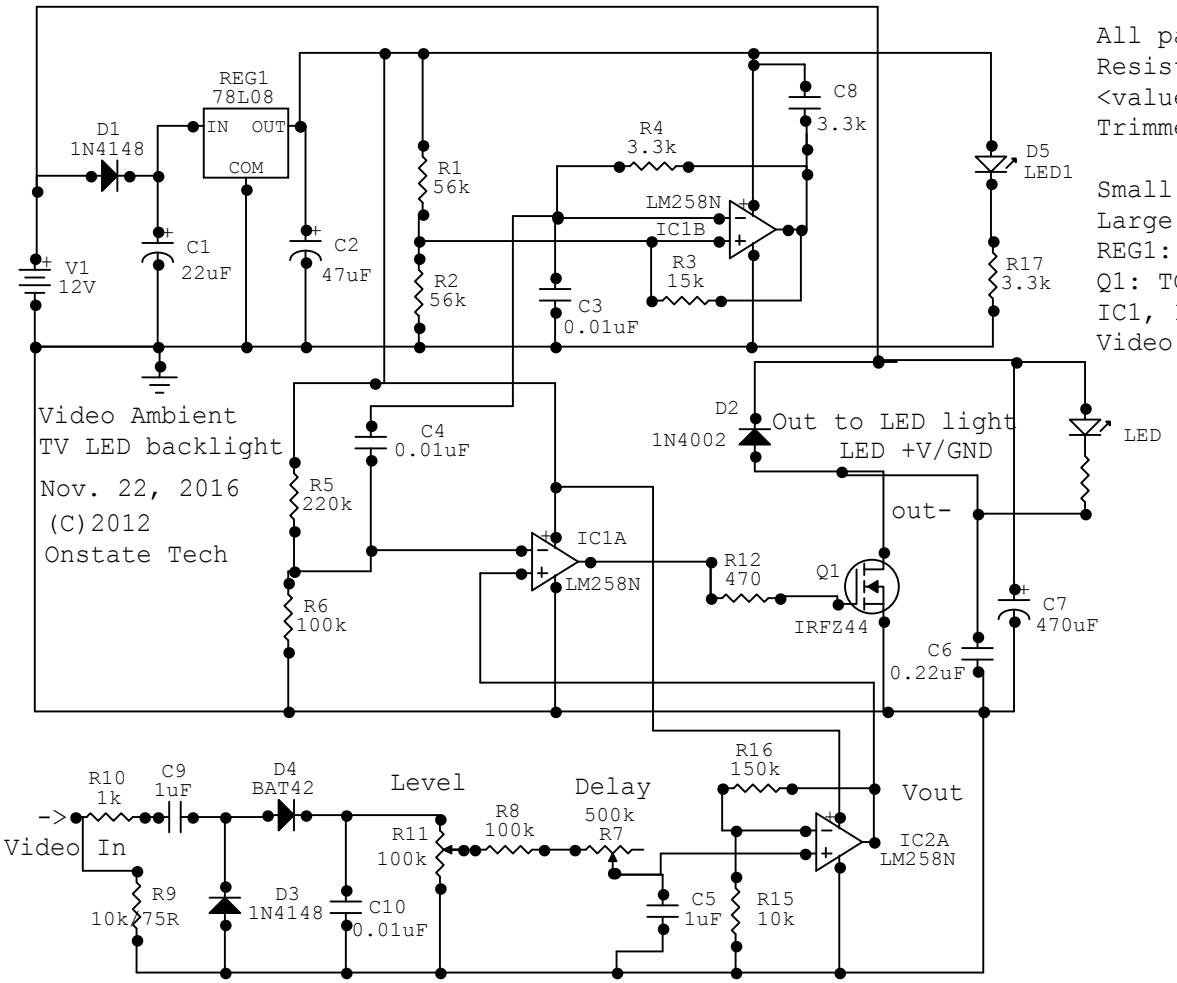

All parts available at Digikey.com
Resistors: 1/6W 5%
<value>EBK-ND, 1.0XEBK-ND=1.0K
Trimmer R (R11/R7):3362P-104LF-ND
3362P-504LF-ND.
Small caps: mono, cer., any type.
Large caps: 0.1", ele. any type.
REG1: TO-92 8V reg.
Q1: TO-220, IRFZ44, IRFZ N-CH MOSFET
IC1, IC2: 8-DIP, LM258/358
Video signal input: standard NTSC/PAL
Composite video (1Vp-p)