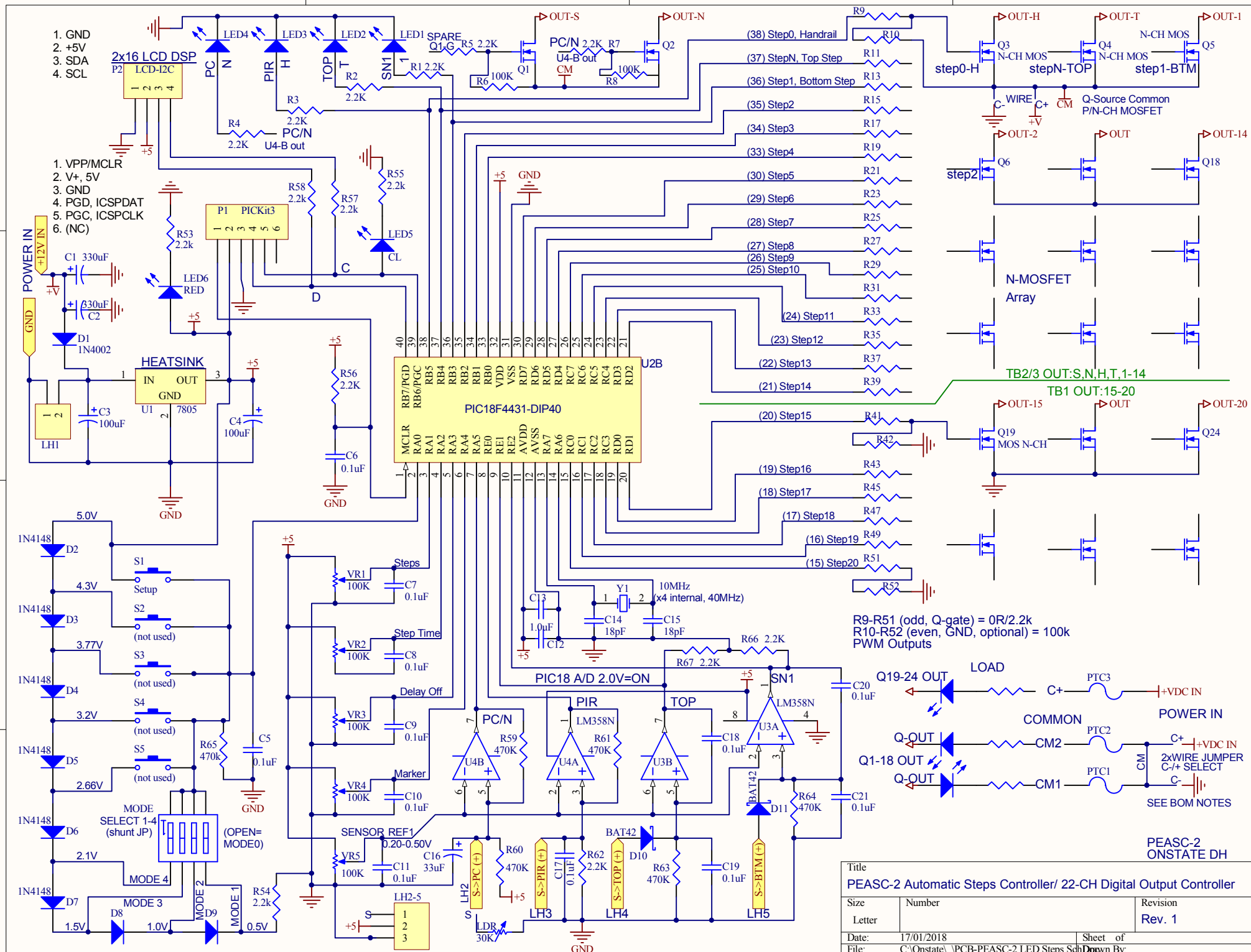

1. GND
2. +5V
3. SDA
4. SCL
2x16 LCD DSP
P2 LCD-I2C
1. VPP/MCLR
2. V+, 5V
3. GND
4. PGD, ICSPDAT
5. PGC, ICSPCLK
6. (NC)
P1 PICKit3
POWER IN
+12V IN
HEATSINK
U1 7805
LH1
PIC18F4431-DIP40
U2B
SPARE Q1-G
PC/N U4-B out
(38) Step0, Handrail
(37) StepN, Top Step
(36) Step1, Bottom Step
(35) Step2
(34) Step3
(33) Step4
(30) Step5
(29) Step6
(28) Step7
(27) Step8
(26) Step9
(25) Step10
(24) Step11
(23) Step12
(22) Step13
(21) Step14
(20) Step15
(19) Step16
(18) Step17
(17) Step18
(16) Step19
(15) Step20
step0-H
stepN-TOP
step1-BTM
N-CH MOS
Q-Source Common
P/N-CH MOSFET
step2
N-MOSFET
Array
TB2/3 OUT:S,N,H,T,1-14
TB1 OUT:15-20
MOS N-CH
10MHz
(x4 internal, 40MHz)
R9-R51 (odd, Q-gate) = 0R/2.2k
R10-R52 (even, GND, optional) = 100k
PWM Outputs
PIC18 A/D 2.0V=ON
Steps
Step Time
Delay Off
Marker
SENSOR REF1
0.20-0.50V
MODE
SELECT 1-4
(shunt JP)
(OPEN=
MODE0)
MODE 4
MODE 3
MODE 2
MODE 1
LH2-5
LH2
LH3
LH4
LH5
LOAD
Q19-24 OUT
Q1-18 OUT
COMMON
POWER IN
+VDC IN
2xWIRE JUMPER
C-/+ SELECT
SEE BOM NOTES
PEASC-2
ONSTATE DH
Title
PEASC-2 Automatic Steps Controller/ 22-CH Digital Output Controller
Size
Letter
Number
Revision
Rev. 1
Date: 17/01/2018
Sheet of
File: C:\Onstate\..\PCB-PEASC-2 LED Steps.Sch
Drawn By: