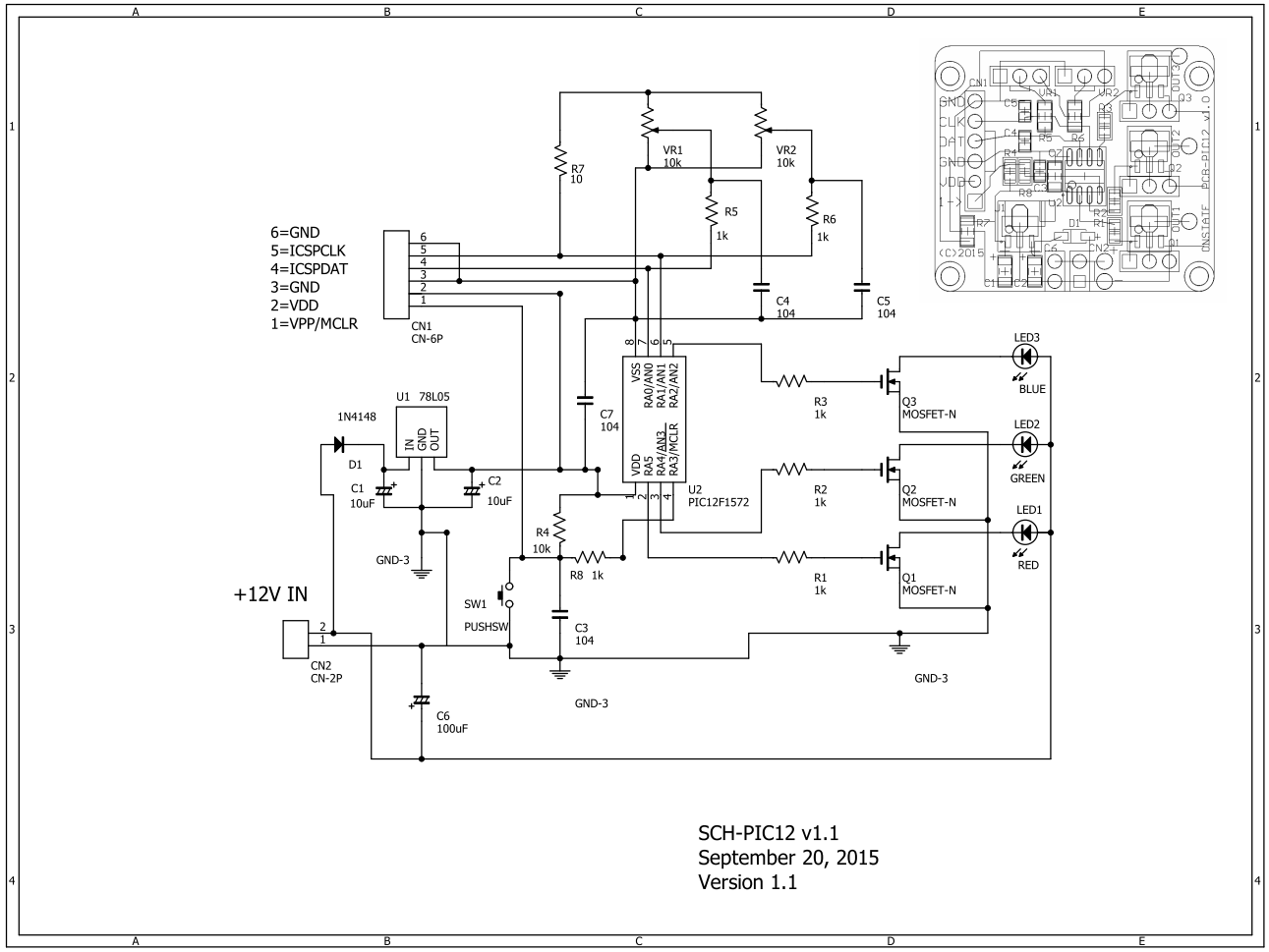
6=GND
5=ICSPCLK
4=ICSPDAT
3=GND
2=VDD
1=VPP/MCLR
CN1
CN-6P
R7
10
VR1
10k
VR2
10k
R5
1k
R6
1k
C4
104
C5
104
U1 78L05
IN
GND
OUT
1N4148
D1
C1
10uF
C2
10uF
GND-3
C7
104
U2
PIC12F1572
VSS
RA0/AN0
RA1/AN1
RA2/AN2
VDD
RA5
RA4/AN3
RA3/MCLR
R4
10k
R8 1k
SW1
PUSHSW
C3
104
+12V IN
CN2
CN-2P
C6
100uF
GND-3
R3
1k
R2
1k
R1
1k
Q3
MOSFET-N
Q2
MOSFET-N
Q1
MOSFET-N
LED3
BLUE
LED2
GREEN
LED1
RED
GND-3
SCH-PIC12 v1.1
September 20, 2015
Version 1.1

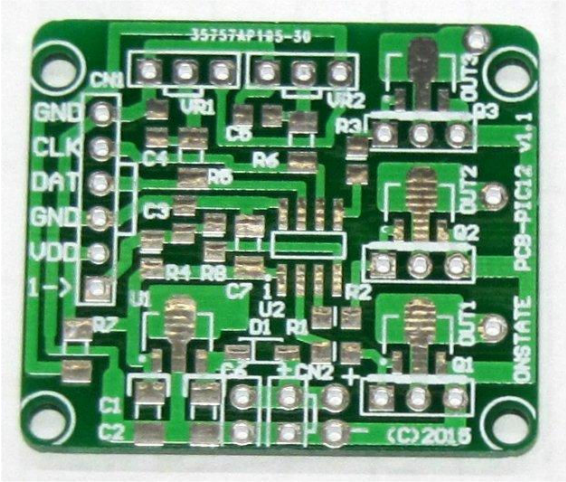
35757AP185-30
GND
CLK
DAT
GND
VDD
1->
CN1
VR1
VR2
C5
R3
C4
R6
R5
C3
R4 R8
C7
U2
D1 R1
R2
R7
U1
C6
CN2
C1
C2
OUT3
OUT2
OUT1
R3
R2
R1
PCB-PIC12 v1.1
ONSTATE
(C)2015

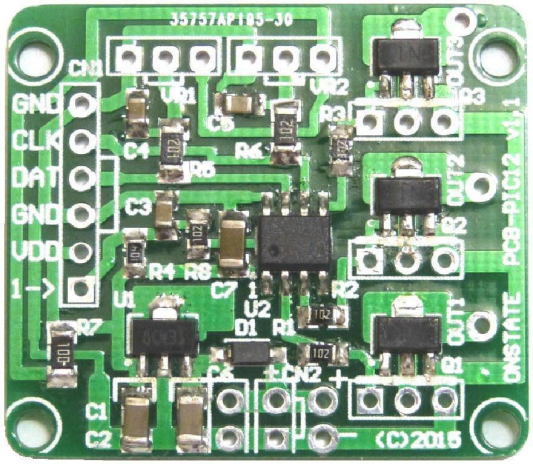
35757AP185-30
GND
CLK
DAT
GND
VDD
1->
CN1
VR1
VR2
C5
R3
C4
R6
R5
C3
R4 R8
C7
U2
D1 R1
R2
R7
U1
C6
CN2
C1
C2
OUT3
OUT2
OUT1
R3
R2
R1
PCB-PIC12 v1.1
ONSTATE
(C)2015